Technical Compendium

CDI® Blood Parameter Monitoring System 550

An overview of the CDI System 550 and its industry leading technology.

TERUMO

CDI® System 550 Measures or Calculates 12 Critical Blood Parameters

The CDI Blood Parameter Monitoring System 550 (CDI System 550) was designed and developed to enable continuous monitoring of in-line blood parameters — pH, pCO_2, PO_2, K^+, temperature, SO_2, hematocrit, hemoglobin, base excess, bicarbonate, oxygen consumption and oxygen delivery during cardiopulmonary bypass (CPB). Using optical fluorescence and reflectance technologies and disposable sensors placed in the extracorporeal circuit, the CDI System 550 monitors and displays real-time changes in blood parameters.

The system provides continuous results and also reduces the need to consume or dispose of blood samples, as is required in laboratory analyzers.

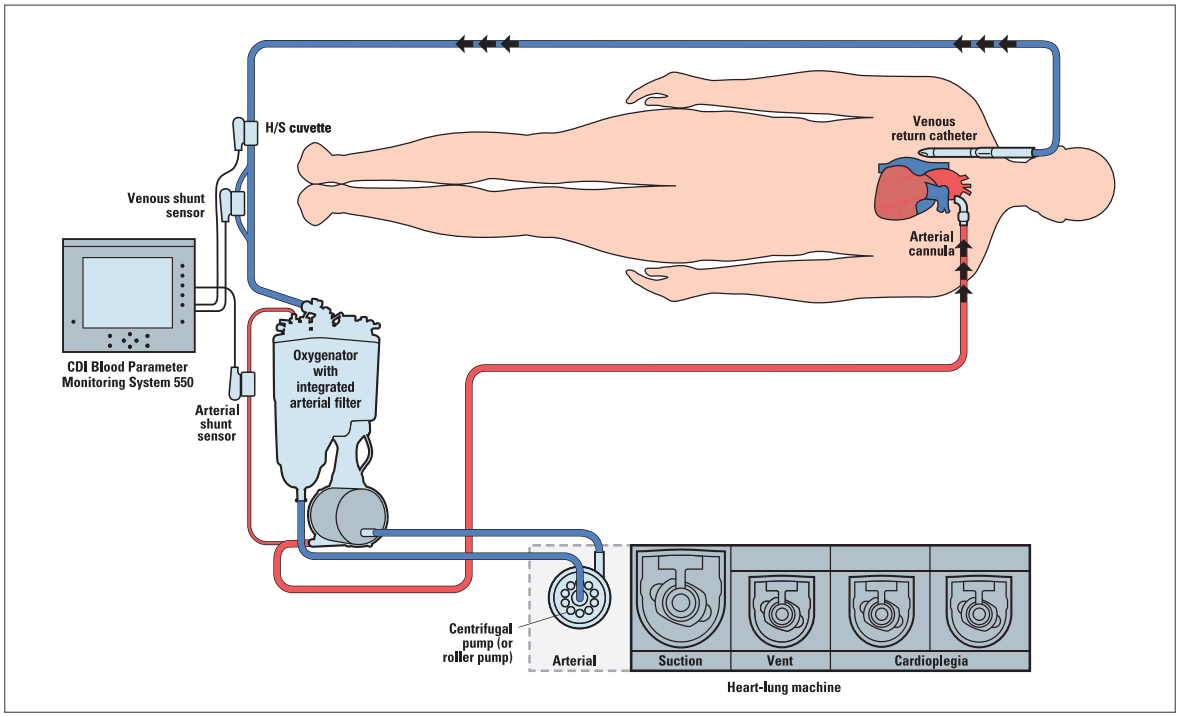

Figure 2: The CDI System 550 shunt sensors and cuvette are placed in the extracorporeal circuit allowing real-time response to changes in blood parameters.

System Accuracy Limits

The CDI System 550 has been subjected to rigorous bench tests to simulate the clinical use of the device and assessed for accuracy and precision over the system operating ranges of the measured parameters. Blood samples taken from the test circuit were analyzed in conventional analyzers, and these results were compared (on a sample-by-sample basis) to analyses provided by the CDI System 550. Accuracy values were generated by using the results from the CDI System 550 minus conventional analyzer results.

Table 2 shows the mean difference between the two measurement techniques, and the standard deviation of the distribution differences found.

	Mean	Standard
pH Sensor	0.007	0.014
pCO_2 Sensor	0.0	2.9
pO_2 Sensor – Arterial (>80 mm Hg)	-0.5	5.5
pO_2 Sensor – Venous (<80 mm Hg)	-0.4	0.8
Oxygen Saturation Value	-0.5	1.6
Total Hemoglobin Value	-0.17	0.54
Potassium Sensor	0.05	0.18
Hematocrit Value	-0.5	1.7

Table 2: Mean measurement error and standard deviation differences found.

TERUMO

CDI® Blood Parameter Monitoring System 550

System Overview

The CDI System 550 consists of a monitor to process and display data in a user-selected combination of blood parameter modules (BPMs) and a hematocrit/oxygen saturation probe (H/S probe), disposable sterile sensors and H/S cuvette, and a calibrator.

The disposable sensors and H/S cuvette are installed in the corresponding cable heads at a point in the circuit which will allow adequate exposure to blood (see Figure 1).

Users select the combination of BPMs and H/S probe depending on the parameters to be monitored (see Table 1). BPMs, which measure arterial or venous pH, pCO_2, pO_2, and K^+, use optical fluorescence technology in conjunction with the disposable shunt sensor. The CDI System 550 calculates the following important parameters: arterial oxygen saturation, base excess, bicarbonate, venous oxygen consumption, and oxygen delivery. The H/S probe, which measures hematocrit, hemoglobin and oxygen saturation, uses optical reflectance technology in conjunction with the disposable H/S cuvette.

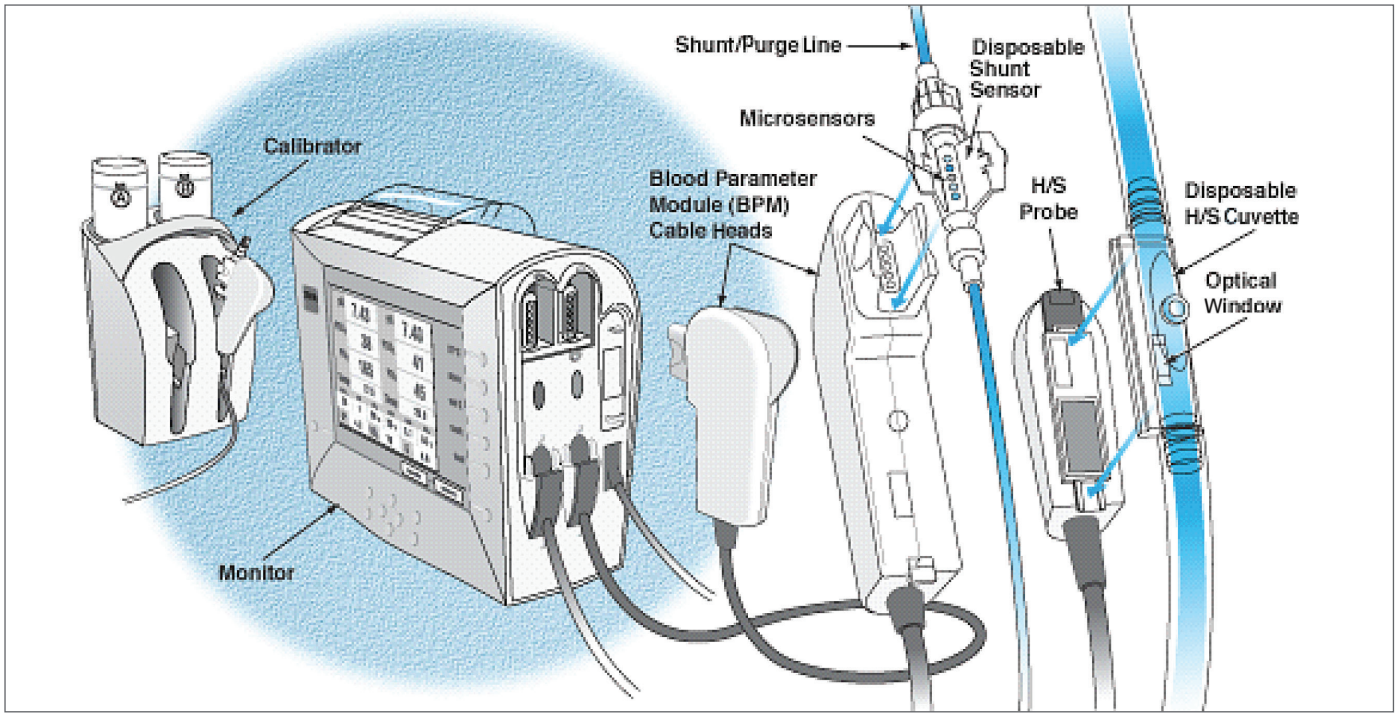

Figure 1: *Components of the CDI System 550.*

Parameters Measured	Components	Technology Utilized
Arterial, pH, pCO_2, pO_2, and K^+	Arterial BPM with shunt sensor	Optical fluorescence
Venous, pH, pCO_2, pO_2, and K^+	Venous BPM with shunt sensor	Optical fluorescence
Hct, Hgb, O_2 saturation	H/S probe with H/S cuvette	Optical reflectance

Table 1: *Component configurations of the CDI System 550. System calculates the following important blood parameters: Arterial SO_2, BE, HCO_3, VO_2, DO_2*

Optical Fluorescence with the CDI® Shunt Sensor

The CDI System 550 uses optical fluorescence technology with the shunt sensor to measure pH, pCO_2, pO_2, and K^+ in blood. The shunt sensor contains four microsensors — one each for pH, pCO_2, pO_2, and K^+ — and a thermistor to measure temperature. Temperature is measured at the shunt sensor site and does not represent the patient's actual temperature. The microsensors are in direct contact with the blood, enabling rapid response time.

The CDI System 550 shunt sensor can be placed in any arterial or venous shunt or purge line with continuous flow (see Figure 2). A minimum blood flow requirement of 35 mL/min is necessary for proper measurement.

During normal operation of the CDI System 550, light emitting diodes (LEDs) in the cable heads direct light pulses toward the microsensors, which contain fluorescent dyes (see Figure 3). As these pulses strike the microsensors, fluorescent light is emitted. The intensity of the fluorescent light will vary depending on the pH, pCO_2, pO_2, and K^+ in the blood. A photo detector in the cable head measures the intensity of the fluorescent light and converts it to numerical data which is displayed on the monitor screen.

The pH, pCO_2, and pO_2 measurements are taken every second. The K^+ measurement is taken every six seconds.

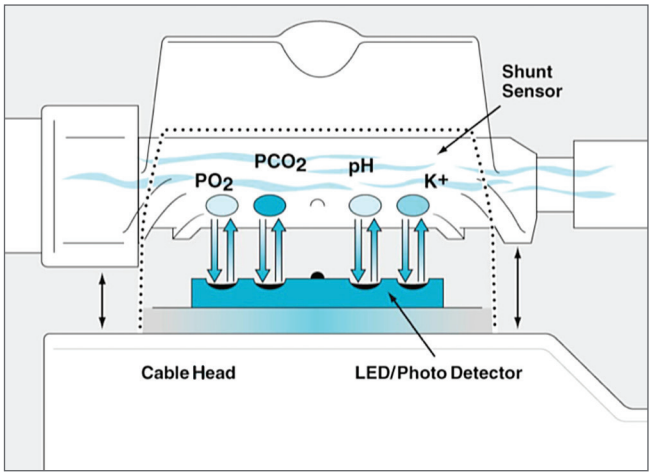

Figure 3: *Optical fluorescence: CDI System 550 shunt sensor and BPM cable head.*

Optical Reflectance with the CDI H/S Cuvette

The CDI System 550 uses optical reflectance technology with the H/S probe to measure total hemoglobin and percent oxyhemoglobin, which exhibit different absorbance and reflectance characteristics at different wavelengths.

The flow-through H/S cuvette is installed directly in the tubing circuit. A window in the cuvette allows optical measurement without blood contact (see Figure 1).

LEDs in the H/S probe direct light pulses of specific wavelength at the blood through the optical window in the H/S cuvette (see Figure 4). The absorbance characteristics of hemoglobin and oxyhemoglobin can be measured by the photodetector in the H/S probe. Hemoglobin and oxyhemoglobin measurements are taken every 18 milliseconds.

The output of the detector is converted to numerical data which is displayed on the monitor's screen.

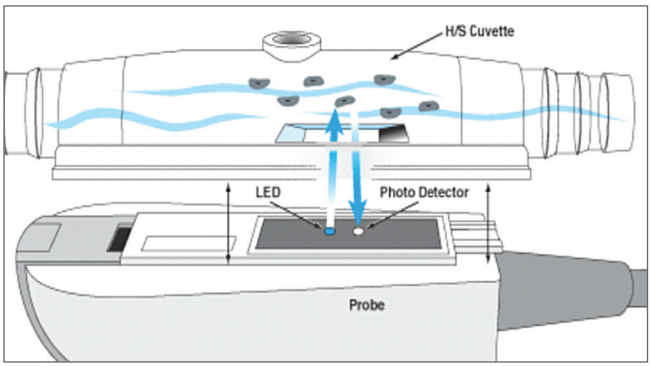

Figure 4: *Optical reflectance: CDI H/S cuvette and probe.*

Cuvette Blood Flow Rates

The CDI System 550 should only be used where there is blood flow through the extracorporeal circuit. To perform accurately, the H/S cuvette requires blood flow rates shown in Table 3.

H/S Cuvette Connector Size	Minimum Flow	Maximum Flow
1/2"	1.0 LPM	7.0 LPM
3/8"	0.5 LPM	4.0 LPM
1/4"	0.2 LPM	1.5 LPM

Table 3: *Restoration of blood flow above the minimum through the H/S cuvette will restore performance of the system.*

CDI® Blood Parameter Monitoring System 550
Calibration of the Microsensors

pH, pCO_2, pO_2 Sensors

Sensors for pH, pCO_2, and pO_2 are calibrated using a two-point tonometered calibration system, similar to the system used to calibrate the electrodes in laboratory analyzers.

The calibration process uses the CDI Calibrator 540 and two canisters of calibration gases, Gas A and Gas B. The calibration gases contain precise, defined levels of pCO_2 and pO_2 gases (see Table 4). During calibration, the shunt sensors (attached to the BPM cable heads) are placed in the calibrator, allowing the calibration gases to flow through the buffer solution contained in each shunt sensor. This exposes the microsensors to the gases with known pCO_2 and pO_2 values. A predefined pH value for each calibration gas is determined by the interaction of the known pCO_2 level in the calibration gas with the buffer solution.

	Gas A (Model CDI506)	Gas B (Model CDI507)
pH	7.171 pH units	7.599 pH units
pCO_2	7.5% ±0.1% (55.6 mm Hg)	2.8% ±0.1% (20.8 mm Hg)
pO_2	27.5% ±0.1% (203.9 mm Hg)	4.0% ±0.1% (29.7 mm Hg)

Table 4: *Calibrating gas values for the CDI System 550. Balance of gas mixture is nitrogen (N2). Gases measured at 1 atm and 21° C.*

To perform the calibration, the system measures the fluorescent intensities emitted by a microsensor as it is exposed to Gas A and then Gas B. It then plots these two fluorescent measurements as a function of the predefined values of the calibration gases (see example for pO_2 in Figure 5). The system uses the two points to create a slope and a y-intercept for that parameter. During bypass, as the system measures the fluorescent intensity of the blood in the extracorporeal circuit, it uses the slope and intercept to extrapolate corresponding blood parameter values.

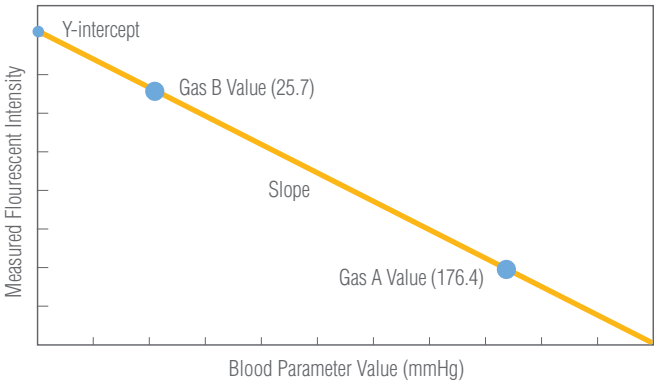

Figure 5: *Example of a 2-point calibration for pO_2 sensor.*

K^+ Sensor

Calibration of the K^+ microsensor also relies on a two-point slope and intercept calibration process. The slope is defined using the factory-measured value encoded in the calibration code entered from the sensor pouch during the initial calibration sequence (as described in the Operator's Manual). The intercept point is obtained after the initiation of bypass using the K^+ level in a patient blood sample: the sample is drawn; the CDI System 550 K^+ reading is stored in the system; the sample is processed using the laboratory analyzer; the analyzer's value is then entered into the CDI System 550 to recalibrate the stored reading.

H/S Probe

Each H/S probe is precalibrated at the factory for oxygen saturation, hematocrit, and hemoglobin values; and further calibration is not required before going on bypass. To meet system accuracy limits, perform an in vivo calibration as outlined in the Instructions For Use.

TERUMO

Product Specifications

Displayed Parameters	System Operating Ranges	System Display Ranges
pH	6.8 to 7.8 pH units	6.5 to 8.5 pH units
pCO_2	10 to 80 mmHg (1.3 to 10.7 kPa)	10 to 200 mmHg (1.3 to 26.7 kPa)
pO_2	20 to 500 mmHg (2.7 to 66.7 kPa)	10 to 700 mmHg (1.3 to 93.3 kPa)
K^+	3.0 to 8.0 mmol/L	1.0 to 9.9 mmol/L
Temperature (T)	15° to 40 °C	1° to 45 °C
Oxygen saturation (SO_2)	60 to 100%	35 to 100%
Hematocrit (Hct)	15 to 45%	12 to 45%
Total hemoglobin (Hgb)	5.0 to 15.0 g/dl	4.0 to 15.0 g/dl
Oxygen Consumption (VO_2) Oxygen Consumption (Indexed)	10 to 400 ml/min	10 to 400 ml/min 1 to 999 ml/min/m^2
Oxygen Delivery (DO_2) Oxygen Delivery (Indexed)	10 to 2000 ml/min	10 to 2000 ml/min 1 to 20000 ml/min/m^2
Base Excess (BE)	-25 to 25 mEq/L	-25 to 25 mEq/L
Bicarbonate (HCO_3)	0 to 50 mEq/L	0 to 50 mEq/L
Blood flow (Q)		0.0 to 9.9 L/min

Product Specification	Size (H x W x D)	Weight
Monitor	28 cm x 38 cm x 17 cm	7.9 kg
Calibrator	32 cm x 21 cm x 26 cm	3.81 kg

Monitor Power Requirements and Specifications

100-240 VAC, 50/60 Hz
12 volt backup battery
Data Output Port: RS-232 serial interface
Pumping Systems Input Port: RS-232/RS-485 serial interface

Model CDI510H Shunt Sensor

Sterile, heparin-treated
Priming volume 1.2 ml

Serial Data Output

The CDI® System 550 has a serial data output port, which allows use with an external serial printer, computer, or data acquisition system. When the CDI System 550 is attached to an external device, users can send patient data (blood parameter values over the course of an operation) from the CDI System to this device.

Output Type	"ASCII Output," "Packet Mode" or "Terumo Systems"
Data Bits	"8 data/1 stop" or "7 data/2 stop"
Parity	"none," "even," or "odd"
Baud Rate	1200, 2400, 4800, 9600, 19200, or 38400
Output Interval	0, 0.1, 0.5 minutes, or 1-10 minutes ("0" means the CDI System 550 will send data on demand only)

Serial Data Pump Flow

A second serial interface port, called the pump interface, allows the CDI System 550 to receive flow (Q) data from selected pumps. These are the Terumo® Advanced Perfusion System 1, Sarns™ Perfusion System 9000, Sarns™ Modular Perfusion System 8000, Sarns™ Centrifugal Pump, Sorin/LivaNova S5/C5, Medtronic Bio-Console® 550/560 Centrifugal Pump, HL20/Rotaflow Console (Getinge/Maquet/Jostra), and the Terumo NEO System. When using the pump interface port with the Terumo® Advanced Perfusion System 1, data can also be sent from the CDI System 550, to display blood parameter values on the Central Control Monitor.

System Display Update

Every six seconds

System Measurement Cycle Time

pH, pCO_2, pO_2 = one measurement per second
K^+ = one measurement per six seconds
SO_2, Hct, Hgb = one measurement per 18 milliseconds

H/S Cuvette

Sterile
Priming volume for # 6914 (1/4" x 1/4") = 4 ml
Priming volume for # 6913 (3/8" x 3/8") = 9 ml
Priming volume for # 6912 (1/2" x 1/2") = 16 ml

Terumo Cardiovascular Group
6200 Jackson Road, Ann Arbor, MI 48103-9300 USA
Tel: +1.734.663.4145 Fax: +1.734.663.7981
Email: cardiovascular@terumomedical.com

For a complete list of offices, please consult our website.
www.terumo-cvgroup.com/offices

Terumo Corporation
2-44-1 Hatagaya, Shibuya-Ku, Tokyo 151-0072 Japan
Tel: +81.3.3374.8111 Fax: +81.3.3374.8399

Terumo Europe NV
Authorized EC Representative
Interleuvenlaan 40, 3001 Leuven, Belgium
Tel: +32.16.38.12.11 Fax: +32.16.40.02.49

Terumo Asia Holdings Pte. Ltd.
300 Beach Road, #33-03, The Concourse Singapore 199555
Tel: +65.6.295.1792 Fax: +65.6.294.2329

Terumo Latin America Corporation
8750 NW 36th Street, Suite 600, Miami, FL 33178 USA
Tel: +1.305.477.4822 Fax: +1.305.477.4872

©2018 Terumo Cardiovascular Systems Corporation. October 2018. 891485
Terumo® is a registered trademark of Terumo Corporation. Sarns™ is a trademark and CDI® is a registered trademark of Terumo Cardiovascular Systems Corporation.